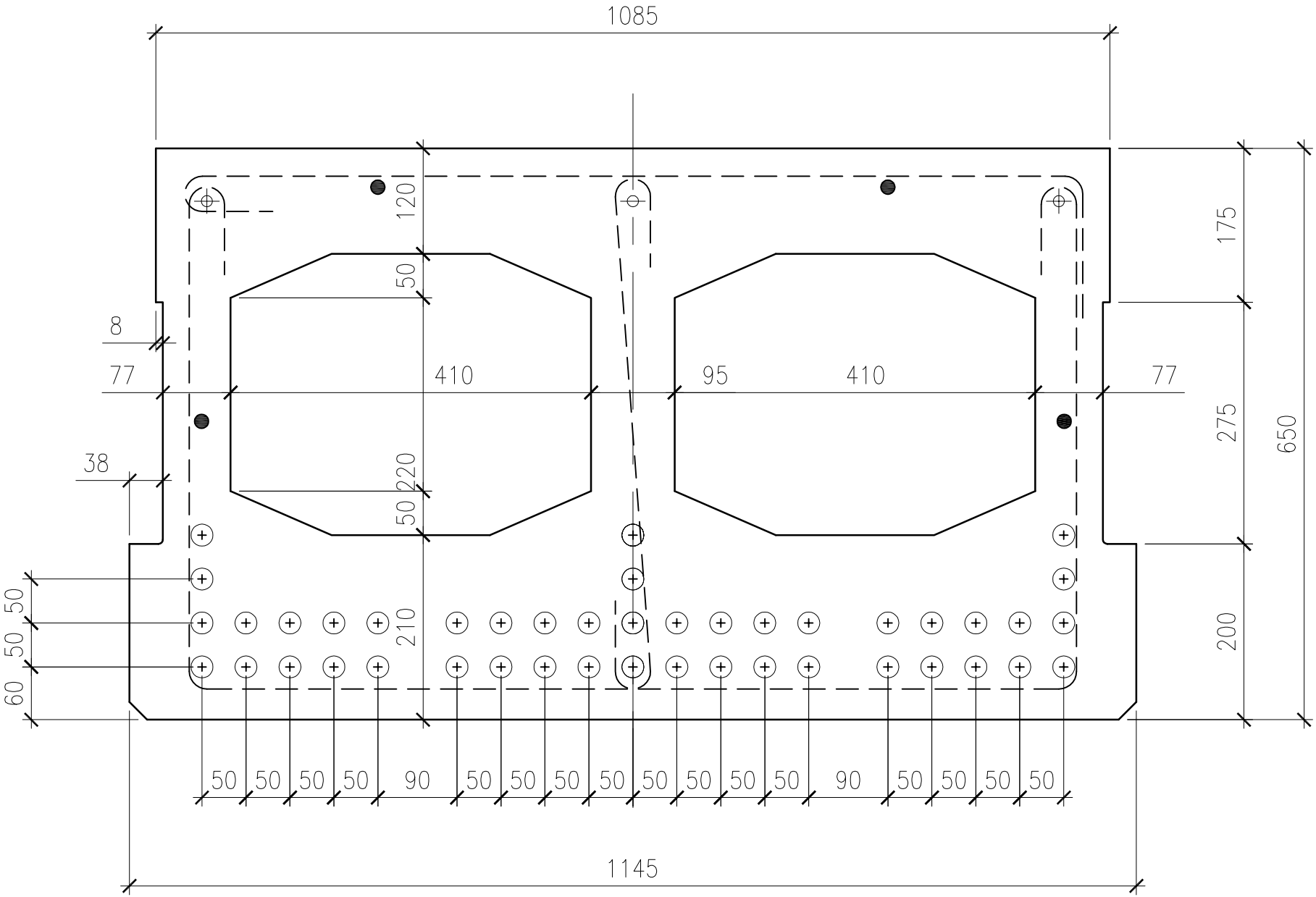

stahlton
ENGINEERED CONCRETE